LED BARN LIGHT

WATTAGES: 100/80/60W Selectable



The LED Barn Light is slim and durable with a light weight design, and provides you with a visually appealing lighting experience. It's light-weight design with quick and easy mounting plate allows simple installation and hands-free wiring. Whether it's new construction,or a retrofit installation,LED Barn lamp will provide years of trouble free operation and keep you on budget.

PRODUCT FEATURES

1.Plug and Play sensor.
2.Fins design,advective grooves between fins are good for heat dissipation.
3.Professional light distribution technique,high light reflectivity reflectors,120° beam angle available;light transmission rate of lens is over 90%.
4.It complies with UL certification,safe and reliable.
5.Power and CCT selectable functions are available.

PRODUCT PARAMETERS

	SPECIFICATION
WATTAGE	100/80/60W Selectable
LUMENS	12138LM
CCT	3500K/4000K/5000K Selectable
CRI	Ra>70
INPUT VOLTAGE	AC120-277V/AC120-347V
OPERATING TEMPERATURE	-40°F~113°F
STORAGE TEMPERATURE	-40°F~158°F
POWER FACTOR	>0.9
DRIVER EFFICIENCY	>90%
PROTECTION LEVEL	Wet Location
WARRANTY	5 years limited

LUMENS DEPOT
PRO LIGHTING SOLUTION
Tel: +18007658555 E-mail: helpdesk@lumensdepot.com https:www.lumensdepot.com
Address: 18 Lawrence Pkwy, Tenafly, New Jersey, 07670, USA

LED BARN LIGHT(BL02)

WATTAGES: 100/80/60W Selectable

PRODUCT DIMENSION

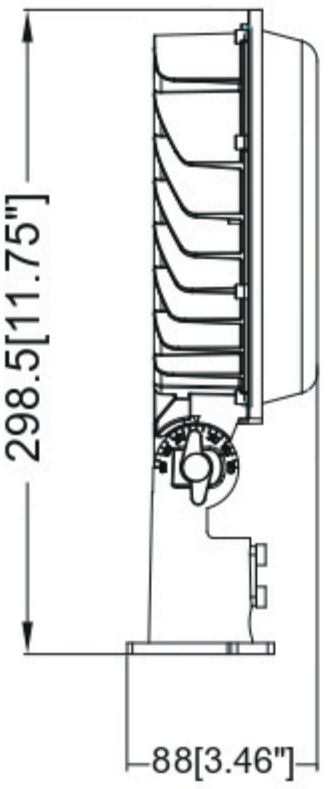

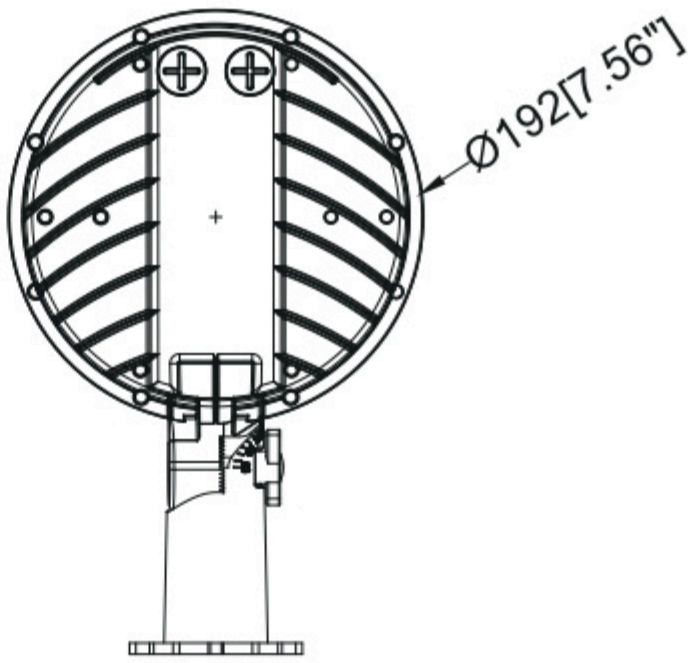

PACKING/WEIGHT

Model	Inner box (1pcs/ctn)	Outber box (20pcs/ctn)	N.W (1pcs/ctn)	G.W (1pcs/ctn)	N.W (20pcs/ctn)	G.W (20pcs/ctn)
100W/80W/60W	L9.92xW7.91xH3.5 inch L252xW201xH89 mm	L16.61xW10.51xH18.5 inch L422xW267xH470 mm	1.76 LBS(0.8Kg)	1.81 LBS(0.82Kg)	31.2 LBS(14.15Kg)	32.85 LBS(14.90Kg)

INSTALLATION

Wall mounting

1.Drill holes in the walls and wire them.

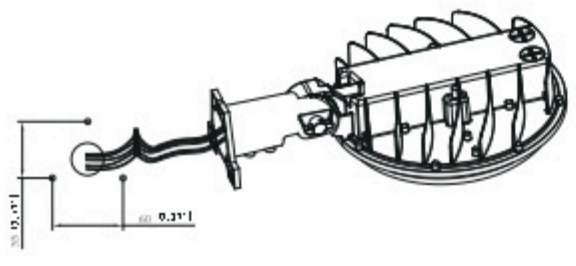

2. Lock the barn lights

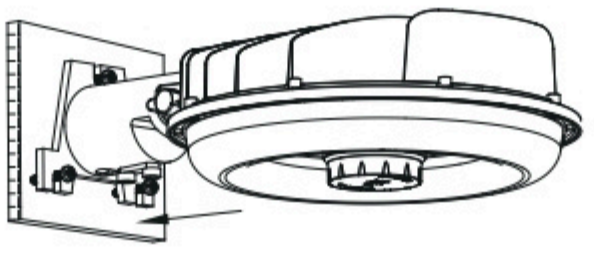

3. Loosen the hand screw, adjust the lamp to the Angle required by the customer, and tighten the hand screw, the installation is complete.

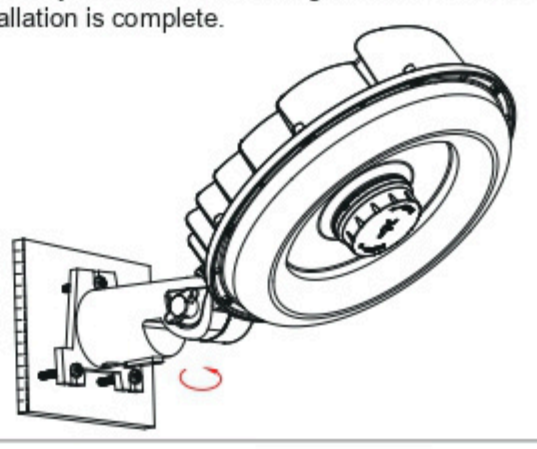

Pole mounting

1.Loosen the screws.

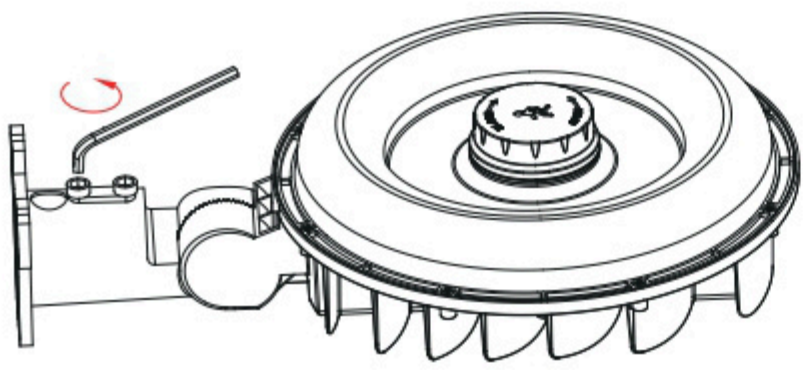

2.Connect the wire.

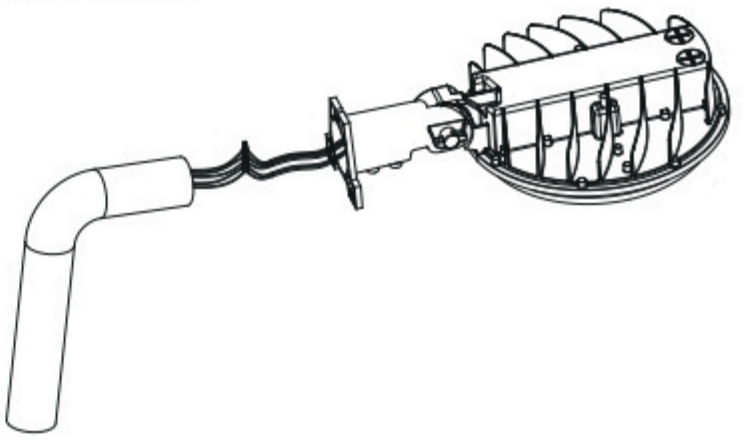

LED BARN LIGHT(BL02)

WATTAGES: 100/80/60W Selectable

3. Install the lamp into the lamp pole and tighten the fixing screws.

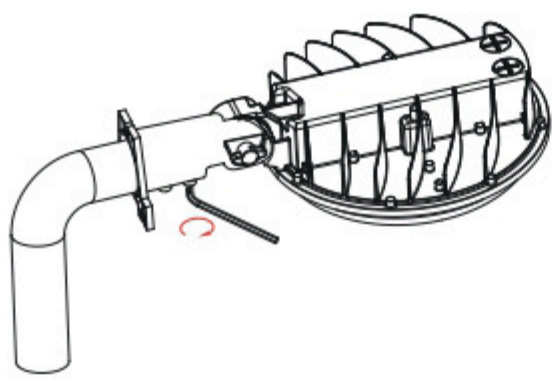

4. Loosen the hand screw, adjust the lamp to the Angle required by the customer, and tighten the hand screw, the installation is complete.

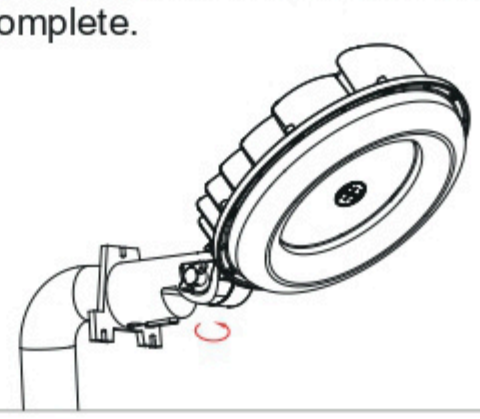

Plug sensor installation

1.Unscrew the PC cap on thel ampshade counter-clockwise with aflat-head screwdriveron the lampwhich already installed.

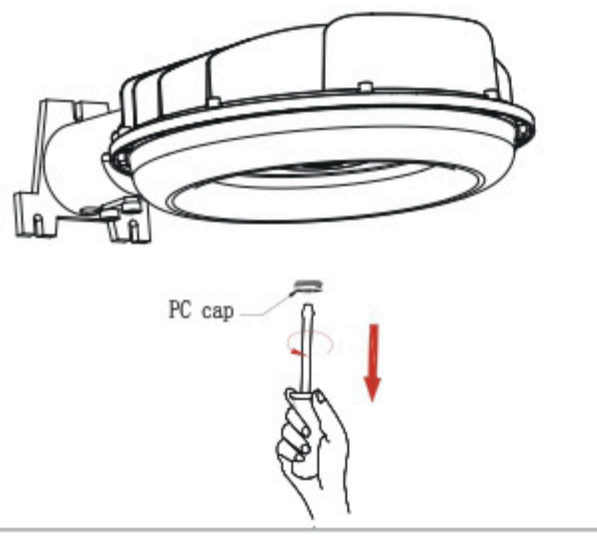

2.Screw the sensor clockwise by hands.

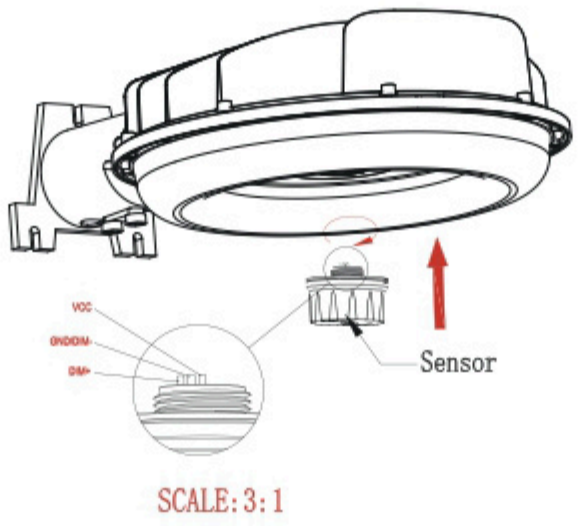

3.After tighten the sensor ,Lighting the lamp, if the sensor works well,the installation finish.

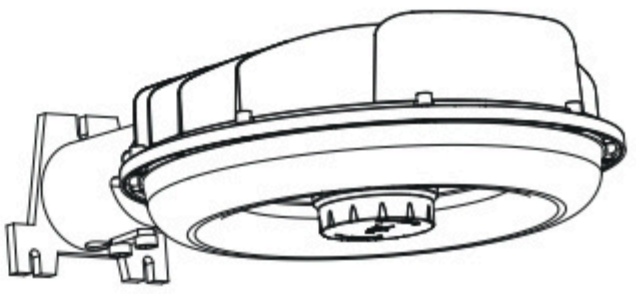

Function of CCT and power Selective

1.Before installation,unscrew the M25 cap counter-clockwise at the back of the lamp by solt type screwdriver.

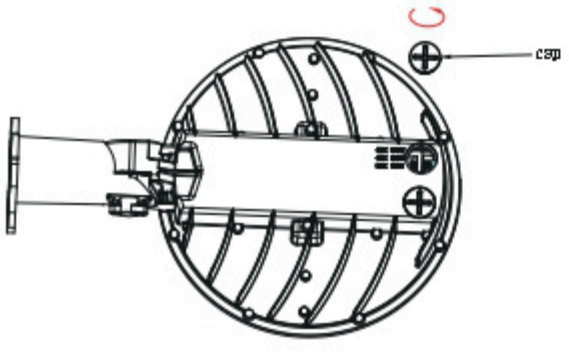

2.According to the tags,customer can select the corresponding power and CCT dip switch, dial to the required power(60w/80w/100w) and CCT(35K/40K/50K).

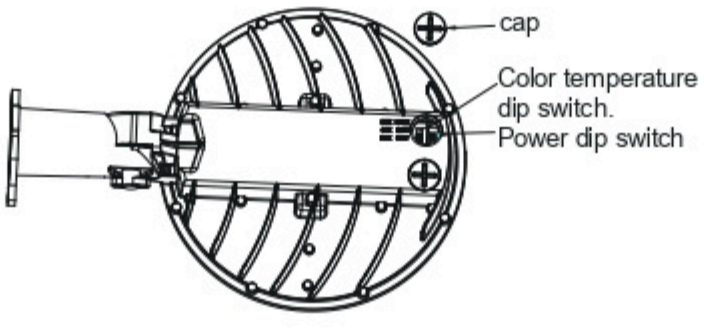

3.After finish the requires power and CCT adjustment, Tighten the M25 cap clockwise by slot type screwdriver.

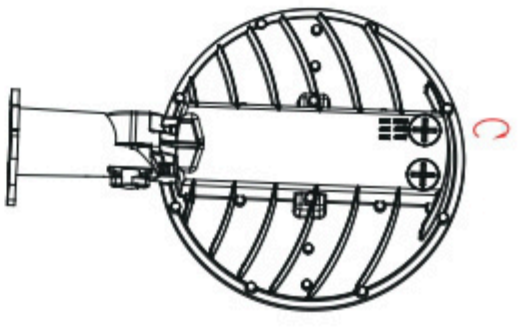

APPLICATIONS



LUMENS DEPOT
PRO LIGHTING SOLUTION
Tel: +18007658555 E-mail: helpdesk@lumensdepot.com https:www.lumensdepot.com
Address: 18 Lawrence Pkwy, Tenafly, New Jersey, 07670, USA